Strikefan Electronic Co.,Ltd

AC Outer Rotor Fan

SA450 AF SERIES Ø450mmX193mm

DIMENSIONS DRAWING | UNIT：mm

- Impeller：Cold rolled steel
  材質：冷軋鋼板
- Bearing System：Two Ball Bearing
  軸承結構：滾珠軸承
- Protection Class：IP54
  防護等級：IP54

P&Q Curve | At Rated Voltage

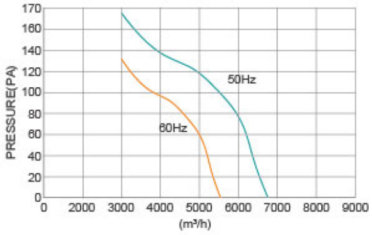

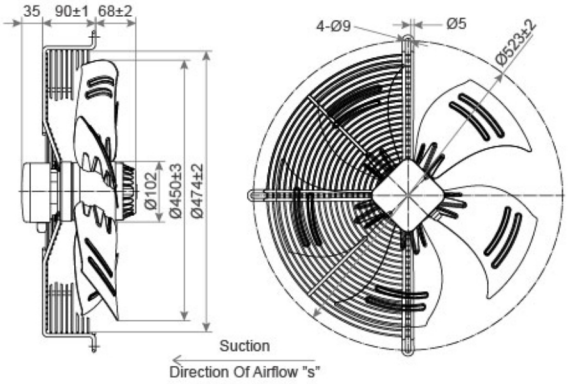

Model No.	Voltage (VAC)	Frequency (Hz)	Current (A)	Power (W)	Speed (RPM)	Capacitor (μF)	Air Flow (CFM)	Air Flow (m^3/min)	Temperature Min / Max(°C)	Noise (dBA)
SA450193B2ML	220 / 230	50 / 60	0.65 / 0.75	135 / 170	920 / 1100	6.0	1705 / 2000	48.3 / 56.6	-30°C ~ +60°C	56 / 58
SA450193B2HL	220 / 230	50 / 60	1.10 / 1.20	250 / 280	1350 / 1600	7.0	2650 / 2825	75.0 / 80.0	-30°C ~ +60°C	62 / 64
SA450193B3ML	380 / 400	50 / 60	0.31 / 0.34	135 / 140	910 / 1030	-	1705 / 2000	48.3 / 56.6	-30°C ~ +60°C	56 / 58
SA450193B3HL	380 / 400	50 / 60	0.50 / 0.60	250 / 280	1350 / 1600	-	2650 / 2825	75.0 / 80.0	-30°C ~ +60°C	62 / 64

★如果您需要的轉速或電壓或功能不在這份清單上，請與我們業務聯繫 If you need another RPM or Voltage or Functions which one is not in the list, please contact us.
★產品詳細數據及功能請參閱承認書 Please see the approval sheet for more information . ★產品規格變更不另行通知 Specifications are subject to change without notice.