Strikefan Electronic Co.,Ltd

AC Axial Fan
SA8038 SERIES 80X80X38mm

DIMENSIONS DRAWING UNIT：mm

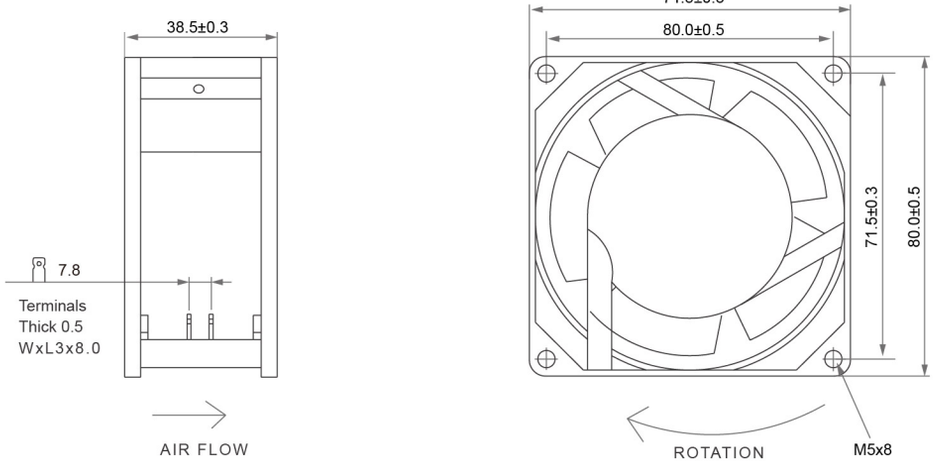

P&Q Curve At Rated Voltage

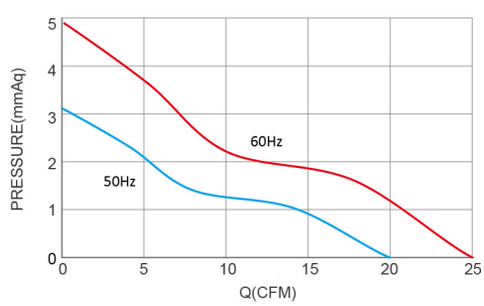

- ●Frame：Aluminum Housing
  外框材質：鋁框
- ●Impeller：Thermoplastic PBT UL 94-V0
  扇葉材質：環保防火PBT UL94-V0
- ●Ingress Protection：Optional IP55 or IP68
  防護等級：可選擇 IP55或IP68
- ●Weight：320g
  風扇單體重量：320克

Model No.	Bearing Type	Voltage (VAC)	Frequency (Hz)	Current (A)	Power (W)	Speed (RPM)	Air Flow (CFM)	Air Flow (m^3/min)	Air Pressure (mmH₂O)	Air Pressure (Inch H₂O)	Noise (dBA)
SA8038B1Hx	◎	115	50/60	0.20/0.15	14.0/ 9.8	2350/2850	20/25	0.57/0.71	3.0/4.6	0.12/0.18	34/37
SA8038B1Mx	◎	115	50/60	0.09/0.07	6.1/ 4.8	2300/2550	19/22	0.54/0.63	2.8/3.7	0.11/0.15	33/35
SA8038B1Lx	◎	115	50/60	0.07/0.05	5.0/ 4.0	2250/2350	18/19	0.51/0.54	2.6/3.0	0.10/0.12	32/33
SA8038S1Hx	※	115	50/60	0.20/0.15	14.0/ 9.8	2300/2750	19/24	0.54/0.68	2.7/4.1	0.11/0.16	33/36
SA8038S1Mx	※	115	50/60	0.09/0.07	6.4/ 5.2	2150/2250	17/18	0.48/0.51	2.5/3.2	0.10/0.13	30/32
SA8038S1Lx	※	115	50/60	0.07/0.05	4.8/ 4.0	2150/2100	17/16	0.48/0.45	2.3/2.7	0.09/0.11	30/29
SA8038B2Hx	◎	220-240	50/60	0.12/0.09	17.2/12.0	2400/2900	20/25	0.57/0.71	3.1/4.8	0.12/0.19	34/37
SA8038B2Mx	◎	220-240	50/60	0.05/0.04	7.0/ 5.7	2250/2400	18/20	0.51/0.57	2.8/3.7	0.11/0.15	32/34
SA8038B2Lx	◎	220-240	50/60	0.04/0.03	6.0/ 5.0	2100/2150	15/16	0.42/0.45	2.4/2.8	0.09/0.11	29/30
SA8038S2Hx	※	220-240	50/60	0.12/0.09	17.5/12.3	2200/2750	18/23	0.51/0.65	3.0/4.6	0.12/0.18	32/35
SA8038S2Mx	※	220-240	50/60	0.05/0.04	7.0/ 5.8	2100/2100	16/16	0.45/0.45	2.5/2.8	0.10/0.11	29/29
SA8038S2Lx	※	220-240	50/60	0.04/0.03	6.0/ 5.0	1900/1800	14/13	0.40/0.37	2.3/2.1	0.09/0.08	26/25

X Bearing System ※：Sleeve ★：WRB Bearing ◎：Ball

★如果您需要的轉速或電壓或功能不在這份清單上，請與我們業務聯繫 If you need another RPM or Voltage or Functions which one is not in the list, please contact us.

★產品詳細數據及功能請參閱承認書 Please see the approval sheet for more information . ★產品規格變更不另行通知 Specifications are subject to change without notice.

3