Strikefan Electronic Co.,Ltd

DC Blower Fan

TRB7530 SERIES 75X75X30mm

DIMENSIONS DRAWING UNIT：mm

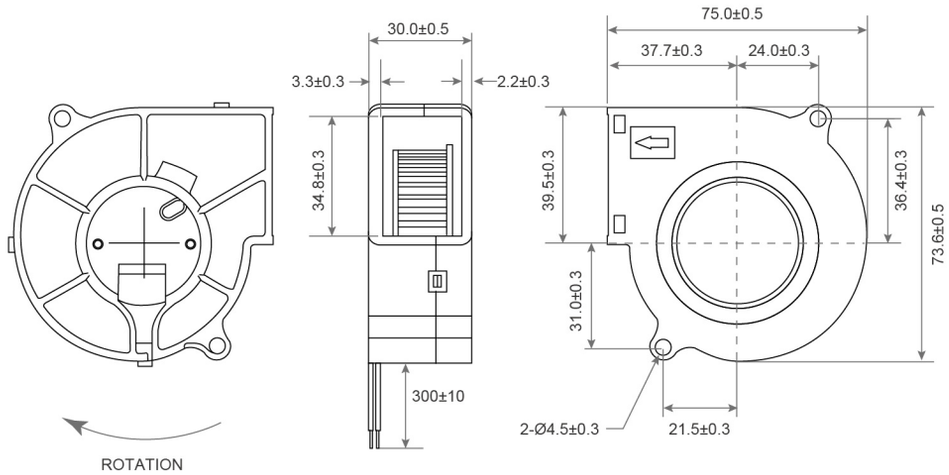

- ●Frame：Thermoplastic PBT UL94-V0
  外框材質：環保防火PBT
- ●Impeller：Thermoplastic PBT UL94-V0
  扇葉材質：環保防火PBT
- ●Bearing System：※Sleeve ・★WRB Bearing・◎Two Ball
  軸承結構：※含油軸承・★專利軸承・◎滾珠軸承
- ●Unit Weight：69g
  風扇單體重量：69克

P&Q Curve At Rated Voltage

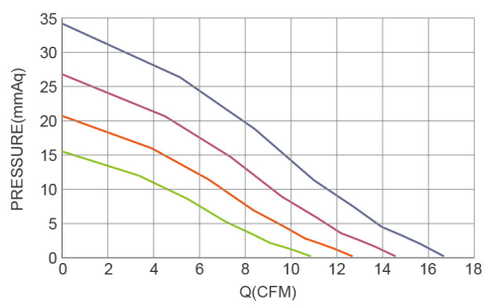

Model No.	Bearing Type	Voltage (VDC)	Current (A)	Power (W)	Speed (RPM)	Air Flow (CFM)	Air Flow (m^3/min)	Air Pressure (mmH_2O)	Air Pressure (Inch H_2O)	Noise (dBA)
TRB7530x12D	※★◎	12 (7.0~14.0)	0.13	1.56	2000	7.61	0.22	7.44	0.29	28.5
TRB7530x12L	※★◎	12 (7.0~14.0)	0.16	1.92	2500	9.42	0.27	11.41	0.45	33.0
TRB7530x12M	※★◎	12 (7.0~14.0)	0.22	2.64	3000	10.87	0.31	15.19	0.60	36.1
TRB7530x12H	※★◎	12 (7.0~14.0)	0.31	3.72	3500	12.68	0.36	20.67	0.81	39.5
TRB7530x12VH	※★◎	12 (7.0~14.0)	0.36	4.32	4000	14.49	0.41	27.00	1.06	43.1
TRB7530x12SH	※★◎	12 (7.0~14.0)	0.44	5.28	4500	16.30	0.46	34.17	1.35	45.8
TRB7530x24D	※★◎	24 (15.0~27.0)	0.06	1.44	2000	7.61	0.22	7.44	0.29	28.5
TRB7530x24L	※★◎	24 (15.0~27.0)	0.08	1.92	2500	9.42	0.27	11.41	0.45	33.0
TRB7530x24M	※★◎	24 (15.0~27.0)	0.11	2.64	3000	10.87	0.31	15.19	0.60	36.1
TRB7530x24H	※★◎	24 (15.0~27.0)	0.16	3.84	3500	12.68	0.36	20.67	0.81	39.5
TRB7530x24VH	※★◎	24 (15.0~27.0)	0.18	4.32	4000	14.49	0.41	27.00	1.06	43.1
TRB7530x24SH	※★◎	24 (15.0~27.0)	0.22	5.28	4500	16.30	0.46	34.17	1.35	45.8

x Bearing System ※：Sleeve ★：WRB Bearing ◎：Ball

★如果您需要的轉速或電壓或功能不在這份清單上，請與我們業務聯繫 If you need another RPM or Voltage or Functions which one is not in the list, please contact us.

★產品詳細數據及功能請參閱承認書 Please see the approval sheet for more information . ★產品規格變更不另行通知 Specifications are subject to change without notice.