Strikefan Electronic Co.,Ltd

AC Cross Flow Fan

SCPAA65 SERIES

- Frame Material 外框材質 : Galvanised Sheet Steel 鍍鋅板材
- Blade Material 風輪材質 : Aluminum 鋁材

DIMENSIONS DRAWING UNIT : mm

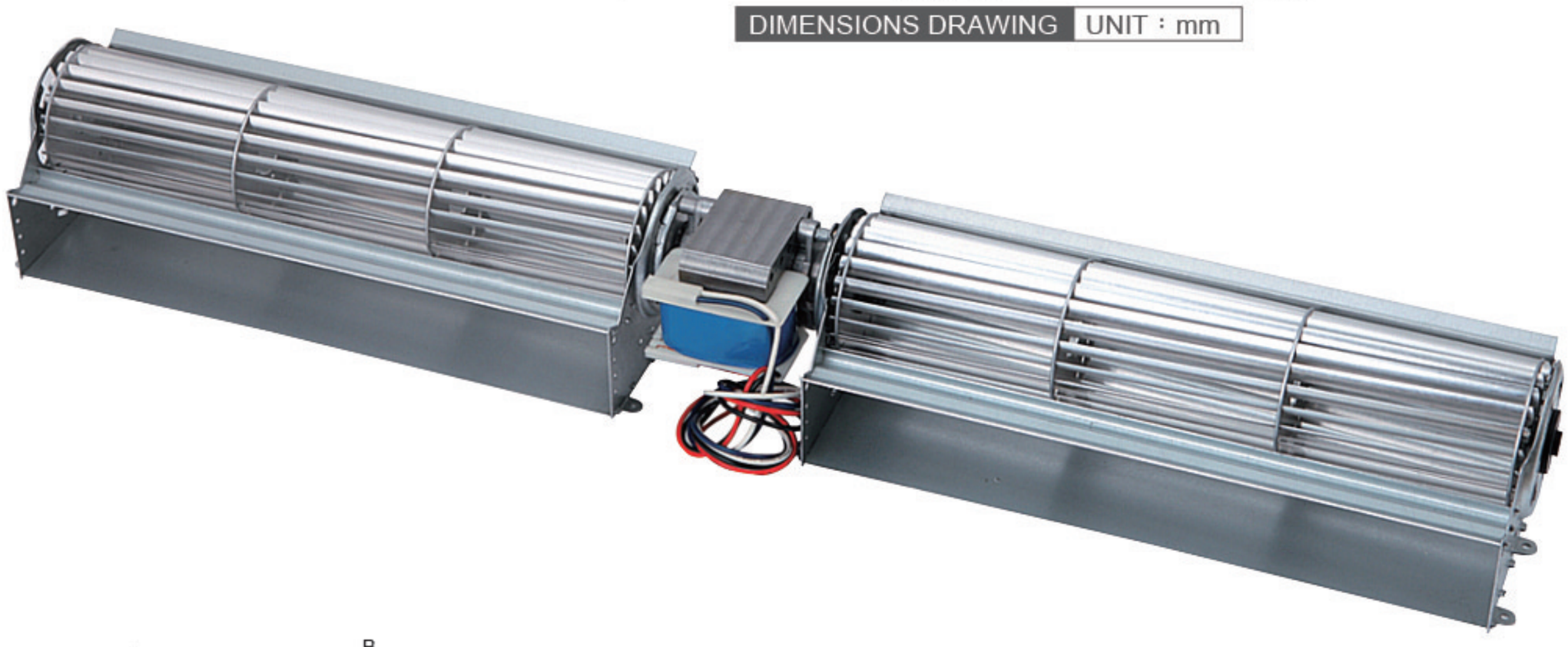

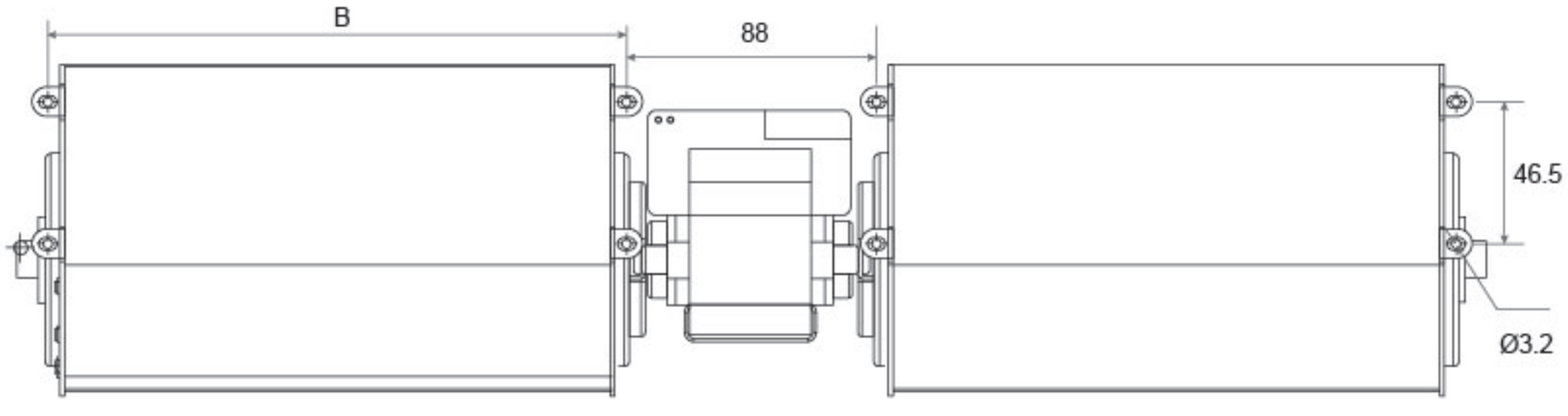

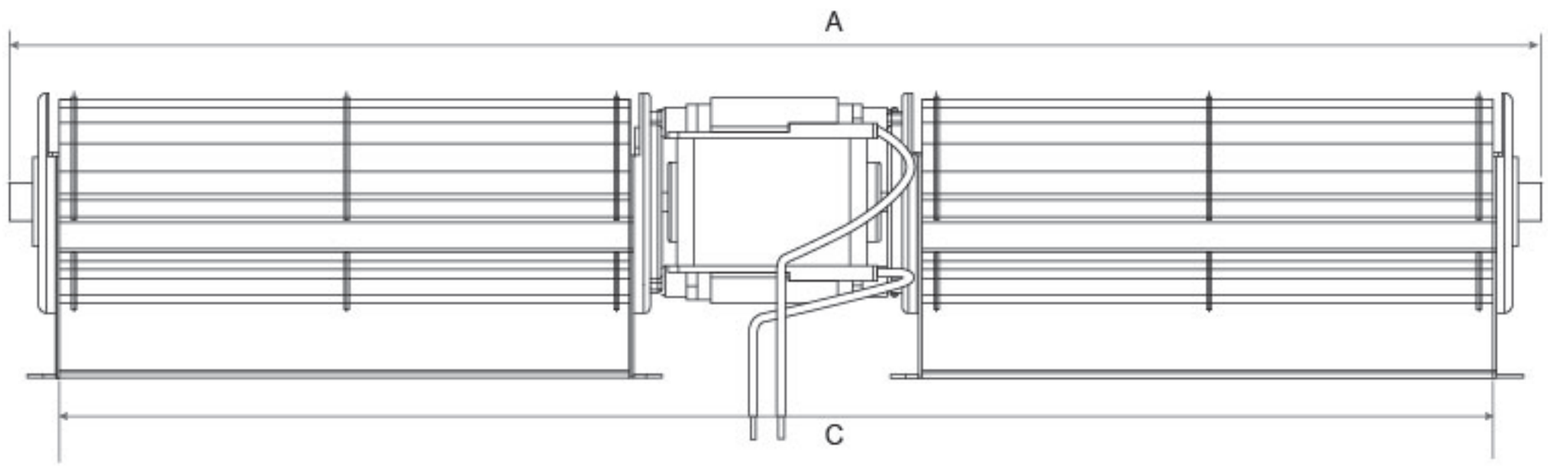

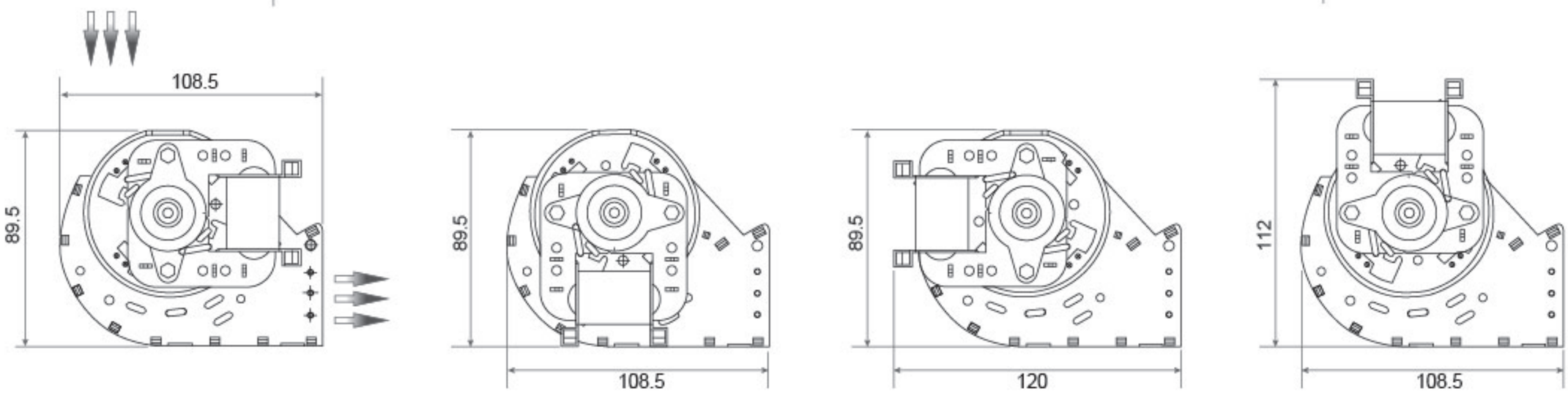

Model No.	Total Length(A)	Installation Hole Distance(B)	Outlet Length (C)	Rated Voltage (VAC)	Frequency (Hz)	Current (A)	Power (W)	Wind Speed (M/S)	Speed (RPM)	Air Pressure (pa)	Air Flow (m^3/h)	Noise (dBA)
SCPAA65240-AC220	602	252	592	220	50	0.36	42.6	-	1400	13	295	41
SCPAA65300-AC220	722	312	712	220	50	0.36	42.6	-	1300	12	310	42
SCPAA65360-AC220	842	372	832	220	50	0.36	42.7	-	1250	11	340	45
SCPAA65420-AC220	962	432	952	220	50	0.36	42.6	-	1100	11	350	45

★如果您需要的轉速或電壓或功能不在這份清單上，請與我們業務聯繫 If you need another RPM or voltage or functions which one is not in the list, please contact us.
★產品詳細數據及功能請參閱承認書 Please see the approval sheet for more information .
★產品規格變更不另行通知 Specifications are subject to change without notice.