EC Centrifugal Fan

KYE190 SERIES Ø190mm

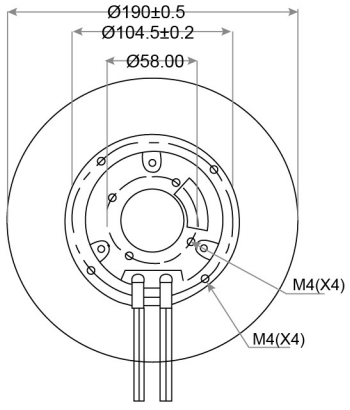

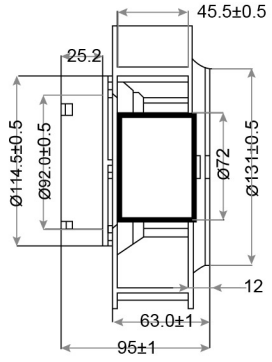

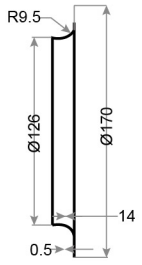

- Frame：Aluminum
  外框材質：鋁合金
- Impeller：Thermoplastic PBT UL94-V0
  扇葉材質：環保防火PBT
- Bearing System：◎Two Ball Bearing
  軸承結構：◎滾珠軸承
- Unit Weight：1300g
  風扇單體重量：1300克

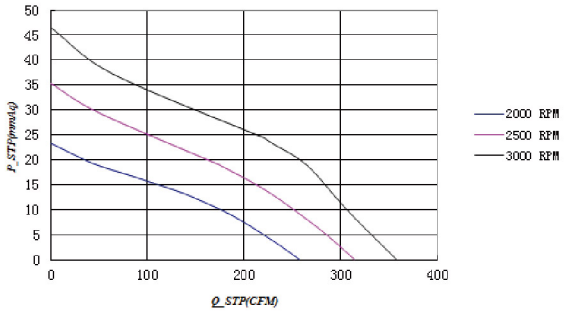

Model No.	Bearing Type	Voltage (VAC)	Frequency (Hz)	Power (W)	Speed (RPM)	Air Flow (CFM)	Air Flow (CMH)	Air Pressure (mmH2O)	Air Pressure (Inch H2O)	Noise (dBA)
KYE190H110	◎	110(80~135)	50/60	45.00	2500	310.30	527.50	30.40	1.20	67.80
KYE190H220	◎	220(180~265)	50/60	45.00	2500	310.30	527.50	30.40	1.20	67.80
KYE190H110	◎	110(80~135)	50/60	60.00	3000	358.20	608.90	46.60	1.90	71.40
KYE190H220	◎	220(180~265)	50/60	60.00	3000	358.20	608.90	46.60	1.90	71.40

★產品詳細數據及功能請參閱承認書 Product have a detail in the approval sheet.
★產品規格變更不另行通知 Specifications are subject to change without notive.