AC Axial Fan
SDA22580 SERIES 225X225X80mm

- Frame：Aluminum
  外框材質：鋁框
- Impeller：Metal
  扇葉材質：金屬葉
- Ingress Protection：Optional IP54 or IP56
  防護等級：可選擇 IP54 or IP56
- Weight：2750g
  風扇單體重量：2750克

P&Q Curve At Rated Voltage

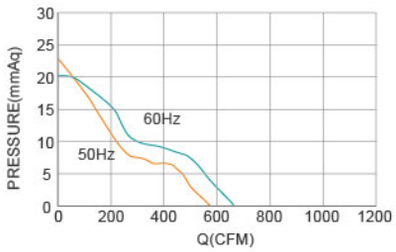

DIMENSIONS DRAWING UNIT：mm

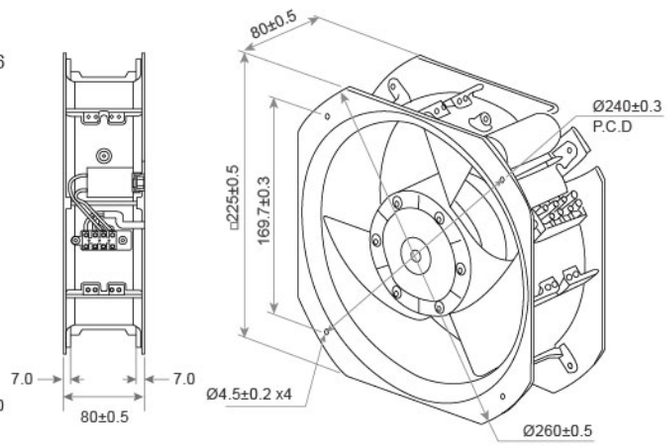

Model No.	Bearing Type	Voltage (VAC)	Frequency (Hz)	Current (A)	Power (W)	Speed (RPM)	Air Flow (CFM)	Air Flow (m^3/min)	Air Pressure (mmH₂O)	Air Pressure (Inch H₂O)	Noise (dBA)
SDA22580B1HK	◎	115	50/60	0.61 / 0.62	53 / 68	2800 / 3200	580 / 670	16.4 / 19.0	23.5 / 20.5	0.93 / 0.81	68 / 71
SDA22580B2HK	◎	230	50/60	0.26 / 0.31	53 / 68	2800 / 3200	580 / 670	16.4 / 19.0	23.5 / 20.5	0.93 / 0.81	68 / 71
SDA22580B2HK(3ø)	◎	230	50/60	0.28 / 0.26	49 / 65	2800 / 3200	590 / 670	16.7 / 19.0	23.4 / 26.8	0.92 / 1.06	68 / 71
SDA22580B3HK(3ø)	◎	380	50/60	0.18 / 0.16	56 / 70	2800 / 3250	590 / 670	16.7 / 19.0	23.4 / 26.8	0.92 / 1.06	68 / 71
SDA22580B3HK(3ø)	◎	440	50/60	0.22 / 0.18	69 / 78	2850 / 3300	600 / 690	17.0 / 19.5	23.6 / 27.4	0.93 / 1.08	69 / 72
SDA22580B4HK(3ø)	◎	480	50/60	0.08 / 0.09	43 / 60	2750 / 3100	580 / 650	16.4 / 18.4	23.0 / 25.8	0.91 / 1.02	67 / 70

AC Axial Fan
SAA2E200 SERIES 225X225X80mm

- Frame：Aluminum
  外框材質：鋁框
- Impeller：Metal
  扇葉材質：金屬葉
- Ingress Protection：IP44
  防護等級：IP44
- Weight：2000g
  風扇單體重量：2000克

P&Q Curve At Rated Voltage

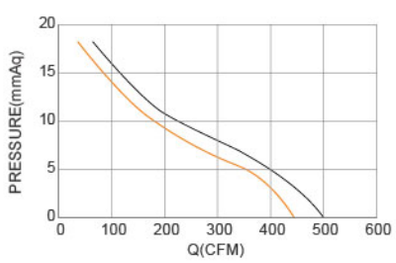

DIMENSIONS DRAWING UNIT：mm

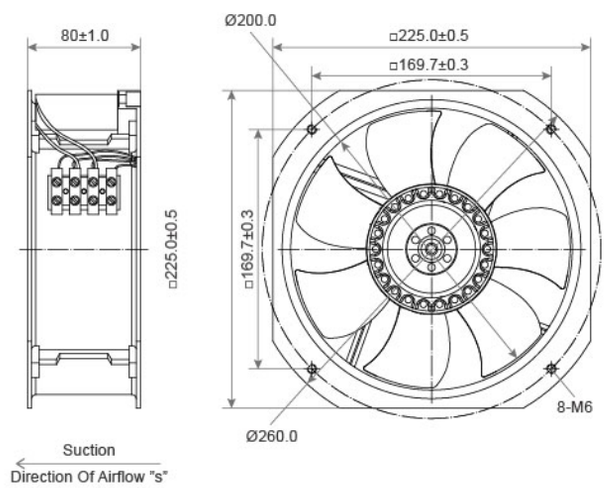

Model No.	Bearing Type	Voltage (VAC)	Frequency (Hz)	Current (A)	Power (W)	Speed (RPM)	Air Flow (CFM)	Air Flow (m^3/min)	Air Pressure (mmH₂O)	Air Pressure (Inch H₂O)	Noise (dBA)
SAA2E200S-7KN-A2	◎	220 / 230	50 / 60	0.17 / 0.16	60 / 80	2300 / 2600	443 / 501	12.52 / 14.20	18.29	0.72	52 / 54
SAA2E200S-7KN-A3	◎	380 / 400	50 / 60	0.17 / 0.16	60 / 80	2300 / 2600	443 / 501	12.52 / 14.20	18.29	0.72	52 / 54

Type ⓧ could be Ⓣ (Terminals) or Ⓛ (Lead Wire)　◎：Ball　※：Sleeve

★如果您需要的轉速或電壓或功能不在這份清單上，請與我們業務聯繫 If you need another RPM or Voltage or Functions which one is not in the list, please contact us.

★產品詳細數據及功能請參閱承認書 Please see the approval sheet for more information . ★產品規格變更不另行通知 Specifications are subject to change without notice.