DC High Pressure Micro Blower
SBA5025 A SERIES 54.5X51X25mm

- Frame：Thermoplastic PBT UL94-V0
  外框材質：環保防火PBT
- Impeller：Thermoplastic PBT UL94-V0
  扇葉材質：環保防火PBT
- Bearing：◎Two Ball bearing
  軸承：◎滾珠軸承

P&Q Curve | At Rated Voltage

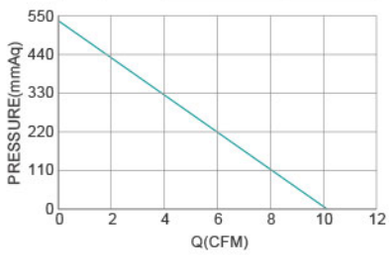

DIMENSIONS DRAWING | UNIT：mm

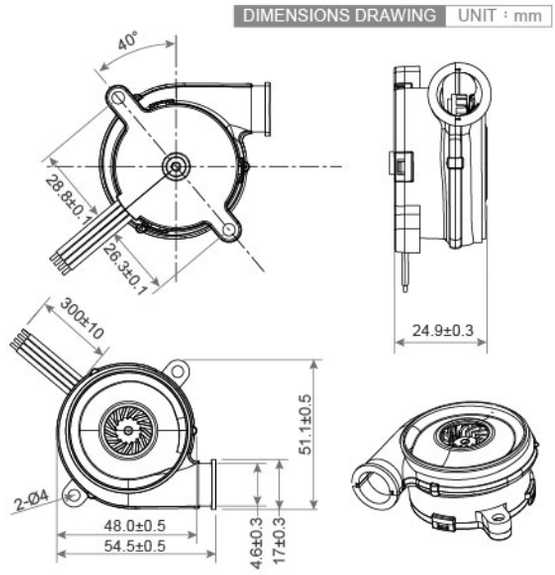

Model No.	Bearing Type	Voltage (VDC)	Current (A)	Power (W)	Speed (RPM)	Air Flow (CFM)	Air Flow (m^3/min)	Air Pressure (mmH2O)	Air Pressure (Inch H2O)	Noise (dBA)
SBA5025B12H	◎	12 (8.5~13.5)	2.8	33.6	40000	10.10	0.286	538.0	21.18	67.2
SBA5025B24H	◎	24 (18.0~26.5)	1.4	33.6	40000	10.10	0.286	538.0	21.18	67.2

DC High Pressure Micro Blower
SBA5025 B SERIES 54.5X50X30mm

- Frame：Thermoplastic PBT UL94-V0
  外框材質：環保防火PBT
- Impeller：Thermoplastic PBT UL94-V0
  扇葉材質：環保防火PBT
- Bearing：◎Two Ball bearing
  軸承：◎滾珠軸承

P&Q Curve | At Rated Voltage

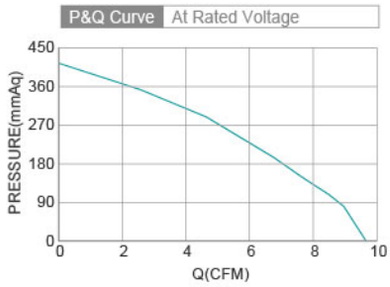

DIMENSIONS DRAWING | UNIT：mm

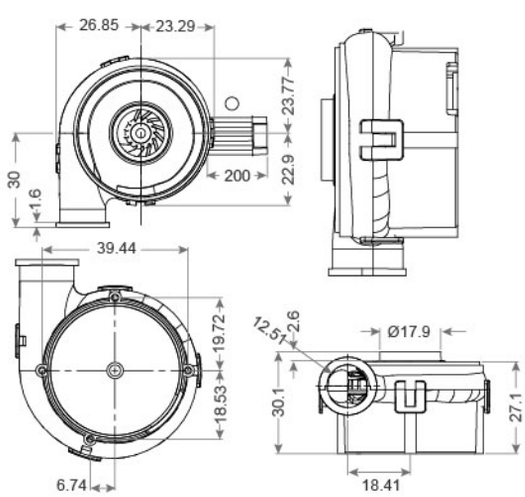

Model No.	Bearing Type	Voltage (VDC)	Current (A)	Power (W)	Speed (RPM)	Air Flow (CFM)	Air Flow (m^3/min)	Air Pressure (mmH2O)	Air Pressure (Inch H2O)	Noise (dBA)
SBA5025B24H	◎	24 (5.0~30.0)	1.0	24.0	37000	9.5	0.27	412.8	16.25	67.0

Bearing System ※：Sleeve ★：WRB ◎：Ball

★如果您需要的轉速或電壓或功能不在這份清單上，請與我們業務聯繫 Please contact us, if the SPEC you need is not in the list.

★產品詳細數據及功能請參閱承認書 Please see the approval sheet for more information . ★產品規格變更不另行通知 Specifications are subject to change without notice.