EC Axial Fan

TRT17251 SERIES 172X150X51mm

- Frame：Aluminum
  外框材質：鋁框
- Impeller：Thermoplastic PBT UL94-V0
  扇葉材質：環保防火PBT
- Bearing：◎Two Ball Bearing
  軸承結構：◎滾珠軸承
- Weight：720g
  風扇單體重量：720克

P&Q Curve | At Rated Voltage

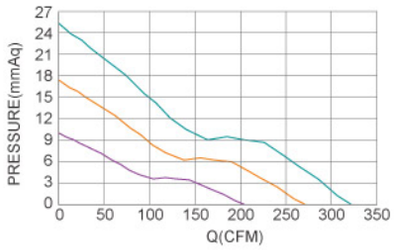

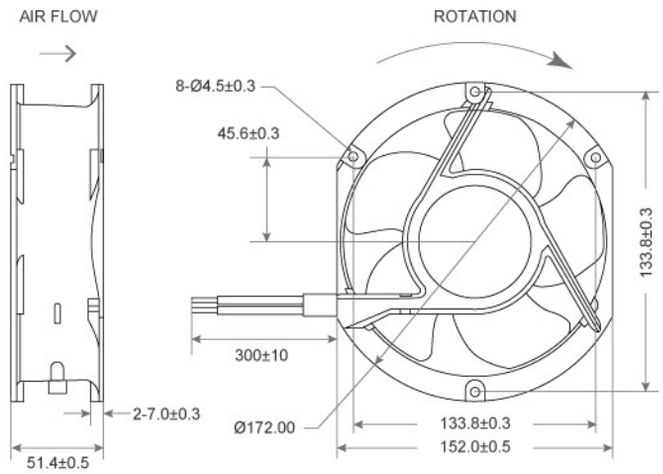

Model No.	Bearing Type	Voltage (VAC)	Frequency (HZ)	Power (W)	Speed (RPM)	Air Flow (CFM)	Air Flow (m^3/min)	Air Pressure (mmH₂O)	Air Pressure (Inch H₂O)	Noise (dBA)
TRT17251x11L	◎	110 (80~120)	45~65	13.00	2600	202.24	5.72	9.78	0.39	49.20
TRT17251x11M	◎	110 (80~120)	45~65	20.00	3500	269.65	7.63	17.38	0.68	56.90
TRT17251x11H	◎	110 (80~120)	45~65	32.00	4200	322.10	9.11	24.79	0.98	61.70
TRT17251x22L	◎	220 (120~240)	45~65	13.00	2600	202.24	5.72	9.78	0.39	49.20
TRT17251x22M	◎	220 (120~240)	45~65	20.00	3500	269.65	7.63	17.38	0.68	56.90
TRT17251x22H	◎	220 (120~240)	45~65	32.00	4200	322.10	9.11	24.79	0.98	61.70

EC Axial Fan

TRT17251 FD SERIES 172X150X51mm

- Frame：Aluminum
  外框材質：鋁框
- Impeller：Thermoplastic PBT UL94-V0
  扇葉材質：環保防火PBT
- Bearing：※Sleeve・◎Two Ball Bearing
  軸承結構：※含油軸承・◎滾珠軸承
- Weight：817g
  風扇單體重量：817克

P&Q Curve | At Rated Voltage

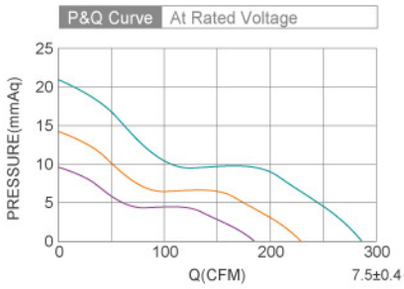

DIMENSIONS DRAWING | UNIT：mm

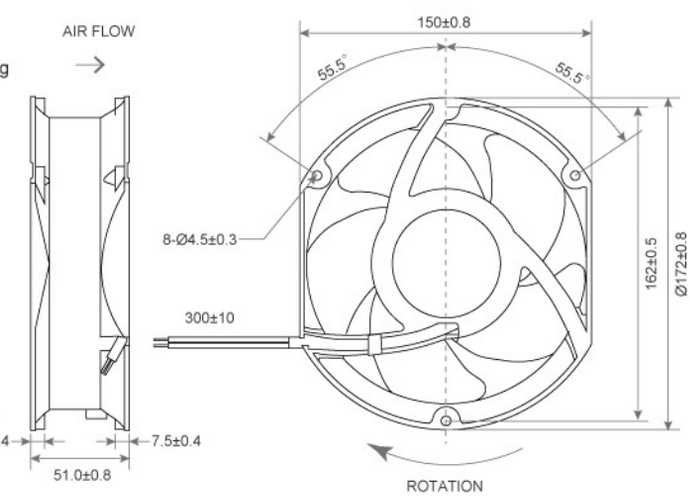

Model No.	Bearing Type	Voltage (VAC)	Current (A)	Power (W)	Speed (RPM)	Air Flow (CFM)	Air Flow (m^3/min)	Air Pressure (mmH₂O)	Air Pressure (Inch H₂O)	Noise (dBA)
TRT17251x12D	◎	110/220 (80~250)	0.027	6.0	2000	148.0	4.2	6.88	0.27	41.5
TRT17251x12L	◎	110/220 (80~250)	0.038	8.4	2500	180.0	5.1	9.65	0.38	47.0
TRT17251x12M	◎	110/220 (80~250)	0.065	14.4	3050	226.0	6.4	13.99	0.55	52.0
TRT17251x12H	◎	110/220 (80~250)	0.125	27.6	3800	282.0	8.0	21.34	0.84	60.0

x Bearing System ※：Sleeve ★：WRB ◎：Ball

★如果您需要的轉速或電壓或功能不在這份清單上，請與我們業務聯繫 Please contact us, if the SPEC you need is not in the list.

★產品詳細數據及功能請參閱承認書 Please see the approval sheet for more information . ★產品規格變更不另行通知 Specifications are subject to change without notice.

Strikefan Electronic Co.,Ltd

EC Axial Fan

TRT17251 FDB1 SERIES 172X150X51mm

- Frame：Aluminum
  外框材質：鋁框
- Impeller：Thermoplastic PBT UL94-V0
  扇葉材質：環保防火PBT
- Bearing：◎Two Ball Bearing
  軸承結構：◎滾珠軸承
- Weight：880g
  風扇單體重量：880克

P&Q Curve | At Rated Voltage

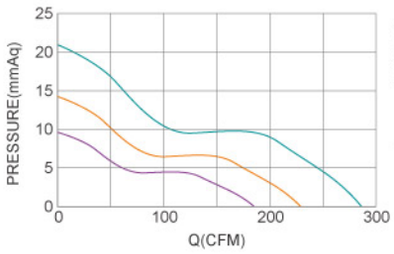

DIMENSIONS DRAWING | UNIT：mm

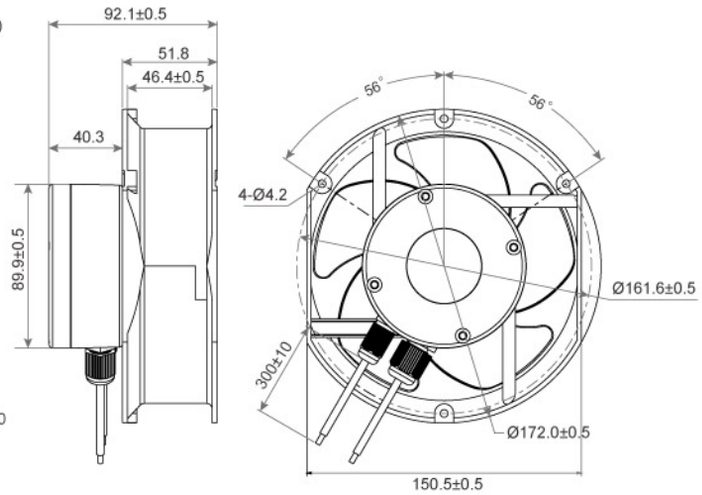

Model No.	Bearing Type	Voltage (VAC)	Frequency (HZ)	Power (W)	Speed (RPM)	Air Flow (CFM)	Air Flow (m^3/min)	Air Pressure (mmH_2O)	Air Pressure (Inch H_2O)	Noise (dBA)
TRT17251x11M	◎	110 (80~120)	50 / 60	80	6500	400.0	11.36	78.48	3.09	72.5
TRT17251x11H	◎	110 (80~120)	50 / 60	140	8500	546.9	15.46	102.11	4.02	78.5
TRT17251x22M	◎	220 (120~240)	50 / 60	80	6500	400.0	11.36	78.48	3.09	72.5
TRT17251x22H	◎	220 (120~240)	50 / 60	140	8500	566.9	16.10	102.11	4.02	78.5

(x) Bearing System ※：Sleeve ★：WRB ◎：Ball

★如果您需要的轉速或電壓或功能不在這份清單上，請與我們業務聯繫 If you need another RPM or Voltage or Functions which one is not in the list, please contact us.

★產品詳細數據及功能請參閱承認書 Please see the approval sheet for more information . ★產品規格變更不另行通知 Specifications are subject to change without notice.